Rental equipment

Joren Marine
Marine Equipment

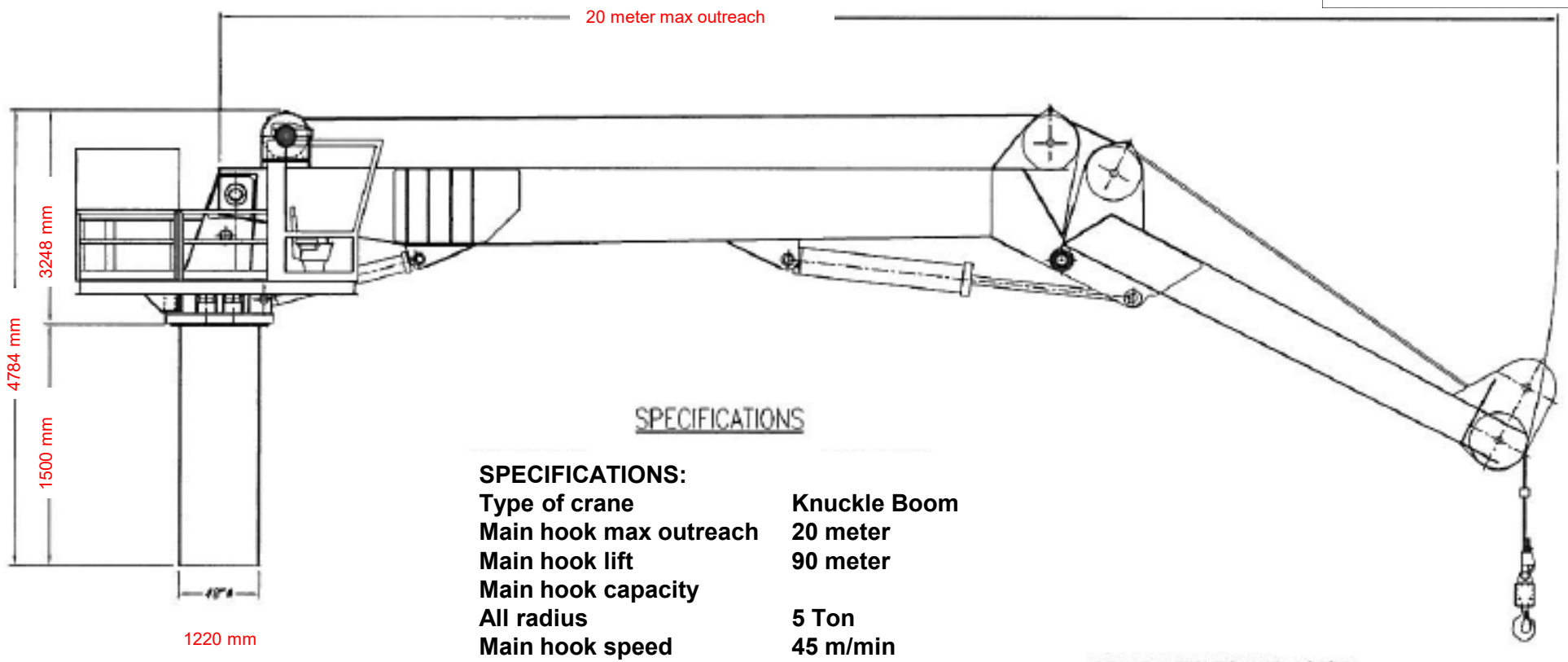

SPECIFICATIONS

SPECIFICATIONS:

Type of crane	**Knuckle Boom**
Main hook max outreach	**20 meter**
Main hook lift	**90 meter**
Main hook capacity	
All radius	**5 Ton**
Main hook speed	**45 m/min**
Slewing speed	**0 – 1.0 RPM**
Slewing rotation	**359 degrees**
Operators crane cabin	**Included**
HPU	**100 HP – 690 Volt 60 hz**

5 Ton capacity hydraulic winch
Main hook load monitor
Dual hydraulic cylinders on main boom
Single hydraulic cylinder on knuckle boom

CRANE WEIGHTS AND LOADS:

UPPER ROTATION:	45,490 LBS
PEDESTAL:	6,740 LBS
SLEW BEARING:	2,293 LBS
TOTAL CRANE WEIGHT:	54,500 LBS
MAX. LIVE LOAD:	11,900 LBS

FOUNDATION REACTIONS:

MAX. OVERTURNING MOMENT:	2,365,955 FT-LBS
MAX. TORSIONAL MOMENT:	323,800 FT-LBS
MAX. VERTICAL LOADS:	66,425 LBS